OVERVIEW FOR:	Replacement Parts for 890/1284	PAGE#	OF
		1	1

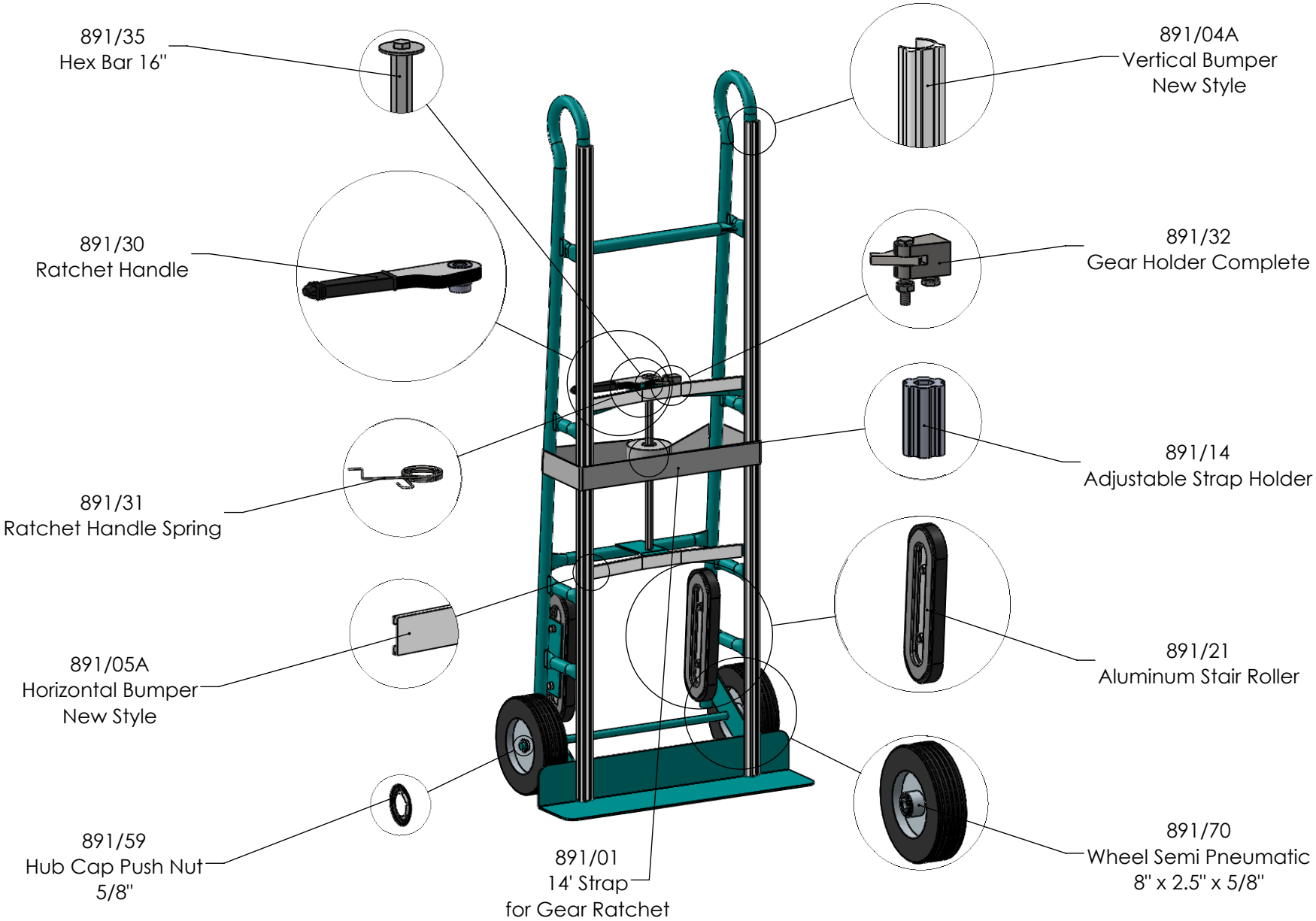

Unitran Manufacturers	PROPRIETARY AND CONFIDENTIAL THE INFORMATION CONTAINED IN THIS DRAWING IS THE SOLE PROPERTY OF Unitran Manufacturers Ltd. ANY REPRODUCTION IN PART OR AS A WHOLE WITHOUT THE WRITTEN PERMISSION OF Unitran Manufacturers Ltd. IS PROHIBITED.		NAME	DATE	DWG. NO.	REV.		NAME	DATE
		DRAWN	Dean S.	1/23/19	U-1899		APPROV.	Jason M.	2/14/19